AMERICAN GEM SOCIETY
LABORATORIES™

Setting the Highest Standard for Diamond Grading®

AGS 104072876107
September 20, 2014
0.800 cts

The Proprietary Light Performance Diamond Quality® Document

Shape and Style	**Round Brilliant**
Measurements	**5.98 - 6.01 x 3.66 mm**
Cut Grade	**AGS Ideal 0**
Light Performance	**AGS Ideal 0**
Polish	**AGS Ideal 0**
Symmetry	**AGS Ideal 0**
Color Grade	**(H) AGS 2.0**
Clarity Grade	**(VS2) AGS 4**
Carat Weight	**0.800 cts**

Brian Gavin® CUT BEYOND BRILLIANT®

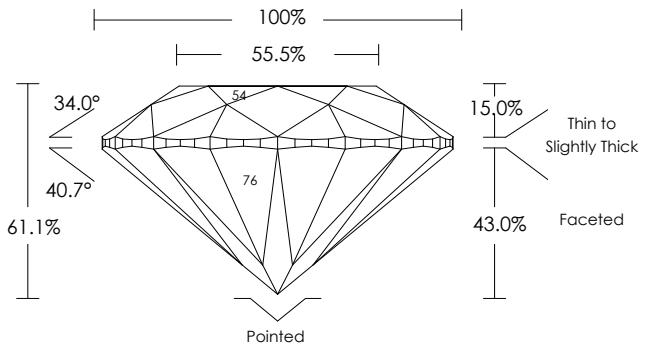

Comments

Fluorescence: Negligible
"Brian Gavin 104072876107" has been inscribed on the girdle of this diamond.

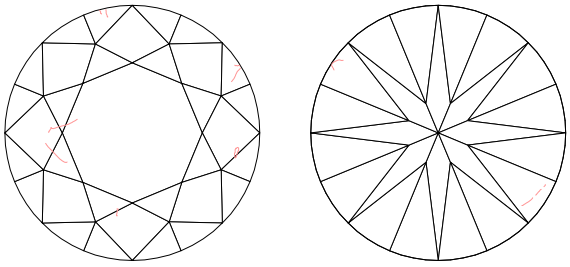

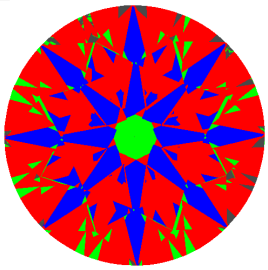

AGSL Computer Generated Light Performance Map for this Diamond.
U.S. Patent No: 7,355,683

Brightness
Contrast
Less Bright
Light Leakage

Key to Symbols

Feather
Crystal

Cut Scale

AGS	0	1	2	3	4	5	6	7	8	9	10
	AGS Ideal	AGS Excellent	AGS Very Good	AGS Good		AGS Fair			AGS Poor		

Color Scale

AGS	0.0	0.5	1.0	1.5	2.0	2.5	3.0	3.5	4.0	4.5	5.0	5.5	6.0	6.5	7.0	7.5	8.0	8.5	9.0	9.5	10.0	To Fancy Yellow
	Colorless			Near Colorless				Faint			Very Light					Light							Fancy Yellow
GIA	D	E	F	G	H	I	J	K	L	M	N	O	P	Q	R	S	T	U	V	W	X	Y	Z	Fancy Yellow

Clarity Scale

AGS	0	1	2	3	4	5	6	7	8	9	10
	Flawless/IF	Very Very Slightly Included		Very Slightly Included		Slightly Included		Included			
GIA	Flawless/IF	VVS1	VVS2	VS1	VS2	SI1	SI2	I1	I2	I3	

THIS IS A REPRESENTATION OF THE ACTUAL DOCUMENT

ORIGINAL

Copyright © 1996-2013 American Gem Society Laboratories, LLC. All Rights Reserved.